JBL SP8 SoundPoint® Series

JBL Loudspeaker Troubleshooting/Repair Tips

Most customers prefer to do simple loudspeaker repairs themselves. By following the steps below, a majority of loudspeakers can be returned to their original factory performance with minimum effort. Choose the example that best describes the problem you are experiencing.

Problem 1: No sound or distorted sound from one loudspeaker in a pair (or set)

Connect the dead/distorting loudspeaker to a different amplifier channel (one that had a functioning loudspeaker connected to it). If it functions normally, the problem is not loudspeaker-related. If the loudspeaker still makes no sound or sounds distorted, a wire may have become loose or disconnected, the network (also known as a crossover) may be defective, the drivers (woofer, tweeter, etc.) may be defective or, in very rare cases, all may be defective.

Refer to the wiring diagram and exploded view below. The network is a small circuit board found on the inside of the terminal cup, or mounted to an inside wall of the enclosure. It sends low-frequency sounds to the woofer, high-frequency sounds to the tweeter and, if applicable, mid-frequency sounds to the midrange driver. Make sure all wires are secure and connected. Look for components on the network that look burnt, “bulged,” or abnormal. If everything looks normal, connect the network to the drivers from another matching loudspeaker. MAKE SURE you attach the correct wires to each driver – mid- and low-frequency sounds can damage the tweeter! If there is still no sound or distorted sound, the network is defective. If there is clean undistorted sound, the drivers are defective.

Problem 2: No sound or distorted sound from one or more (but not all) drivers in an enclosure

Remove the problem driver(s) from the enclosure and make sure all wires are secure and connected. If they are, proceed with the following test:
Woofer or midrange driver – Connect the driver’s + and – input terminals directly to the loudspeaker wires from your receiver/amplifier and play some music at a reasonable volume. If the driver now sounds normal (produces a clean, undistorted sound), the network is most likely defective.
Tweeter – Replace the tweeter with a functioning tweeter from another loudspeaker. If the tweeter now functions normally (produces clean, undistorted sound), the original tweeter is defective. If the replacement tweeter also sounds distorted or produces no sound, the network is most likely defective.

Problem 3: Loudspeakers distort, rattle or pop at higher volumes

This is usually NOT a loudspeaker problem. Common causes are too much power (playing the loudspeakers too loud and causing them to distort), an amplifier with not enough power (the amplifier can’t produce the required volume without distorting), excessive equalization (turning the tone controls too far clockwise, and/or engaging the loudness/bass boost button on your receiver) or some combination of the above. If only one loudspeaker is exhibiting the problem, and you’re confident that it’s not caused by too little power/too much power/excessive equalization, see solutions for Problems 1 and 2.

WIRING DIAGRAM

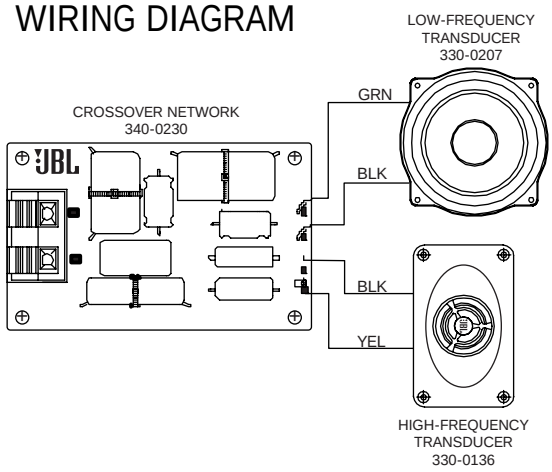

EXPLODED VIEW

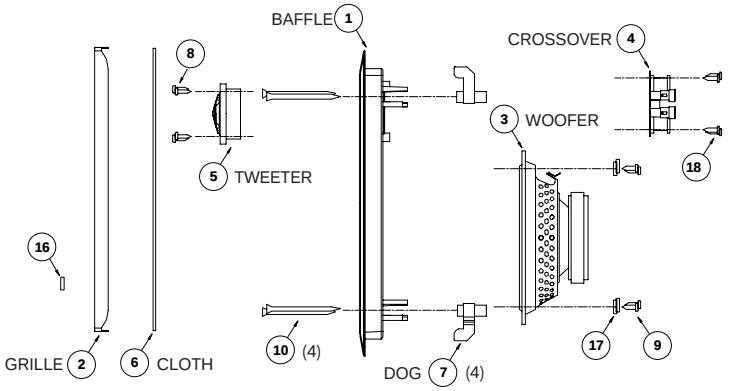

Item	Part No.	Description
1	020-0095	BAFFLE SP8
2	590-0104	GRILLE HTi8/SP8
3	330-0207	WOOFER JBL SP8
4	340-0230	CROSSOVER JBL SP8
5	300-0136	TWEETER JBL SP8
6	GRILLE CLOTH not sold alone – see 590-0104	
7	210-0205	DOG SOUNDPOINT
8	130-0124	SCREW #6-AB x 0.5" PHL PAN STL ZNC
9	130-0010	SCREW #8-AB x 0.38" PHL PAN SST
10	130-0111	SCREW #8-AB x 2.25" PHL FLT STL ZNC
11	220-0564	CARTON BEAUTY JBL SP8
12	220-0438	CARTON TEMPLATE HTi8/SP8
13	170-0035	OWNER’S MANUAL JBL SP8
14	170-0022	WARRANTY CARD JBL
15	170-0023	CUSTOMER SURVEY CARD JBL
16	180-0008	LOGO JBL
17	130-4003	WASHER #8 FLAT NARROW STL ZNC
18	130-0110	SCREW #6-AB x 0.38" PHL PAN STL ZNC

SP8 ROUGH-IN FRAME part no. RIF8